48TM016-028

SINGLE-PACKAGE COOLING UNITS WITH FACTORY-INSTALLED GAS HEAT

— PERFORMANCE DATA
— CERTIFIED DIMENSION PRINTS
— CERTIFIED ROOF CURB DIMENSION PRINTS
— SERVICE OPTION DIMENSION PRINTS

ASHRAE 90.1 COMPLIANT

© Copyright 2002 Carrier Corporation • Syracuse, New York 13221

Form 48TM-2SB Supersedes: New Printed in U.S.A. 4-02 Catalog No. 514-80007

Date:	Supersedes:	**48TM16-028 SINGLE-PACKAGE COOLING UNIT WITH FACTORY-INSTALLED GAS HEAT**	48TM	Rev.:

JOB NAME:	LOCATION:	
BUYER:	BUYER P.O. #	CARRIER #
UNIT NUMBER:	MODEL NUMBER:	
UNIT DESIGNATION:		
PERFORMANCE DATA CERTIFIED BY:		DATE:

ARI STANDARD 360

ASHRAE 90.1 COMPLIANT

DESCRIPTION

48TM units are one-piece rooftop cooling units with gas heat. All units are pre-wired and pre-charged with R-22 at the factory. Units are factory tested in both heating and cooling modes. The 48TM units have bottom air openings for separate supply and return ductwork. The 48TMD model is low heat and the 48TMF model is high heat. The 48TMM model is low heat with stainless steel heat exchangers and the 48TMN model is high heat with stainless steel heat exchangers. The 48TM unit is intended for installation on an accessory curb (ordered separately). Horizontal supply and return connections are also possible with a factory-preassembled, high-static regain, horizontal conversion adapter roof curb accessory (ordered separately). Bottom discharge on concentric applications requires a transition duct (field-supplied) external to the unit.

FEATURES

All units meet ASHRAE Standard 90.1.

Standard one-year product warranty.

Five-year non-prorated warranty on Alumagard™ coated Turbo-tubular™ gas heat exchanger.

Five-year warranty on the compressor (48TM016). One year warranty on the compressor (48TM020-028).

Units are rated in accordance with ARI standard 360. Standard unit is certified and listed by ETL and ETL, Canada.

Low outdoor temperature cooling operation to 40 F (4 C) as standard.

Dual freezestat protection is provided as standard.

Dual scroll compressors with internal linebreak protection.

Indoor and outdoor coils constructed of aluminum fins mechanically bonded to seamless internally grooved copper tubes.

Dual TXVs (thermostatic expansion valves) metering devices.

Liquid line filter driers provided in each refrigeration circuit.

Optional gear-driven EconoMi$er equipped with microprocessor controller that includes CO_2 ventilation control capability.

Manually adjustable outside air intake for up to 25% outside air.

Automatic changeover (when used with an auto-changeover thermostat).

Single point gas and electric connections. Disconnect in accordance with NEC must be field-supplied and installed.

All units utilize 2-stage cooling.

Belt drive adjustable evaporator fan.

Choice of low-medium or high-static indoor fan drive capability.

Cabinet made of pre-painted, galvanized steel with baked enamel finish.

Cooling systems have low and high-pressure switches. Two-inch disposable type return air filters are factory installed.

Provision for alternate end return in base unit. Horizontal supply available by using accessory curb. EconoMi$er may be used with horizontal supply and return.

Direct drive propeller condenser fans with vertical discharge.

2-stage gas heat in a single 2-stage gas valve.

Induced draft combustion system with Hall effect sensor to detect proper operation of induced-draft motor.

Heavy Alumagard coated heat exchangers with aluminized steel burners.

Optional stainless steel heat exchangers.

Heating controls with solid-state direct spark ignition system (pilotless system) and redundant gas valve. High temperature limit switches and auto-reset flame rollout switch are standard.

Reliable IGC (integrated gas unit controller) with built in diagnostics to determine error codes and control fan on/off delays for energy savings and maximum comfort control.

Integrated gas unit controller provides anti-cycle protection for gas heat operation.

PERFORMANCE DATA

Unit Operating Weight _____lb

COOLING

Gross Total Capacity _____ Btuh

@ Condenser Air Temperature _____ F

Gross Sensible Capacity _____ Btuh

Compressor Power Input _____ kW

Indoor Entering db _____ F wb _____ F

Airflow _____ External Static Pressure _____ in. wg

Indoor Fan Motor Size _____ Hp

Exhaust Fan Motor Size _____ Hp

Curb Weight _____lb

HEATING

Heating Capacity:

Stage 1 _____ Btuh

Stage 2 _____ Btuh

Heating Capacity Total _____ Btuh

Stage 1 _____ kW

Stage 2 _____ kW

Heating Capacity Total _____ kW

CUT ALONG DOTTED LINE

CUT ALONG DOTTED LINE

ELECTRICAL DATA

Power Supply to Unit _____ Volts _____ Phase _____ Hz

Minimum Circuit Amps _____ Maximum Overcurrent Protection _____

SUBMITTAL DATA

Job Name _____

Architect _____

Engineer _____

Contractor _____

Unit Designation _____

OPTIONS AND ACCESSORIES

FACTORY-INSTALLED OPTIONS

- ☐ Fully Integrated Gear Driven EconoMi$er with Microprocessor Controller
- ☐ Additional 5-Year (6th-10th Year) Extended Protection Plan on the Heat Exchanger
- ☐ Four-Year Extended Protection Plan on the Compressor (020, 025, 028)
- ☐ Apollo Controls
- ☐ Service Option Package (Hinged Access Panels, Non-Fused Disconnect, 115-v Convenience Outlet)
- ☐ Low/Medium/High Gas Heat
- ☐ Pre-Coated Condenser Coils
- ☐ E-Coated Condenser Coils
- ☐ Stainless Steel Heat Exchangers
- ☐ High Static Fan Motor

DESIGN ENHANCEMENT CENTER (DEC) FACTORY OPTIONS

- ☐ 3rd Party Controls (Novar, METASYS, etc.)
- ☐ Smoke Detectors
- ☐ Double Wall Construction
- ☐ Hot Gas Bypass

FIELD-INSTALLED ACCESSORIES

- ☐ Fully Integrated Gear Driven EconoMi$er with Microprocessor Controller
- ☐ Low Ambient Kit — Down to 10 F (016, 020, 028)
- ☐ Low Ambient Kit — Down to 25 F (025)
- ☐ Return Air Temperature Sensor (Differential Dry Bulb EconoMi$er Control)
- ☐ Solid State Enthalpy Control — Outside Air
- ☐ Solid State Enthalpy Control with Harness — Return Air
- ☐ Winter Start Package
- ☐ Roof Curb (14-in.)
- ☐ Roof Curb (24-in.)
- ☐ Roof Curb (Horizontal Supply)
- ☐ Factory Preassembled, High Static Regain, Horizontal Conversion Adapter Roof Curb
- ☐ Additional 5-Year (6th-10th Year) Extended Protection Plan on the Heat Exchanger
- ☐ Four-Year Extended Protection Plan on the Compressor (020, 025, 028)
- ☐ Power Exhaust
- ☐ Barometric Relief
- ☐ Thermostat and Subbase
- ☐ Time Guard® II Device
- ☐ Two-Position Damper Package
- ☐ Motormaster® Control
- ☐ Liquid Propane (LP) Gas Kit
- ☐ Hail Guard
- ☐ CO_2 Sensor — Duct Mount
- ☐ CO_2 Sensor — Wall Mount

CERTIFIED DIMENSION PRINT

48TM016,020

UNITED TECHNOLOGIES CARRIER
P O BOX 4808
SYRACUSE N. Y.
13221

THIS DOCUMENT IS THE PROPERTY OF CARRIER CORPORATION AND IS DELIVERED UPON THE EXPRESS CONDITION THAT THE CONTENTS WILL NOT BE DISCLOSED OR USED WITHOUT CARRIER CORPORATION'S WRITTEN CONSENT.

SUBMISSION OF THESE DRAWINGS OR DOCUMENTS DOES NOT CONSTITUTE PART PERFORMANCE OR ACCEPTANCE OF CONTRACT

UNIT	STD. UNIT WEIGHT	ECONOMIZER WEIGHT	CORNER A	CORNER B	CORNER C	CORNER D	DIM A	DIM B	DIM C
48HJD/HJF015	1725 LBS 782 KG	80 LBS 36 KG	427 LBS 194 KG	390 LBS 177 KG	438 LBS 199 KG	470 LBS 213 KG	3'-5" (1041)	3'-4" (1016)	1'-10" (559)
48HJD/HJF017	1800 LBS 816 KG	80 LBS 36 KG	417 LBS 189 KG	399 LBS 181 KG	481 LBS 218 KG	503 LBS 228 KG	3'-2" (961)	3'-6" (1070)	1'-10" (559)
48TM016	1800 LBS 816 KG	80 LBS 36 KG	417 LBS 189 KG	399 LBS 181 KG	481 LBS 218 KG	503 LBS 228 KG	3'-2" (961)	3'-6" (1070)	1'-10" (559)
48TM020	1850 LBS 839 KG	80 LBS 36 KG	409 LBS 186 KG	393 LBS 178 KG	421 LBS 191 KG	458 LBS 208 KG	3'-4" (1016)	3'-7" (1092)	1'-10" (559)

NOTES:
1. REFER TO PRINT FOR ROOF CURB ACCESSORY DIMENSIONS.
2. DIMENSIONS IN ( ) ARE IN MILLIMETERS.
3. ⊕ CENTER OF GRAVITY.
4. ⇨ DIRECTION OF AIR FLOW.
5. DUCTWORK TO BE ATTACHED TO ACCESSORY ROOF CURB ONLY.
6. MINIMUM CLEARANCE:
   - REAR: 7'0" (2134) FOR COIL REMOVAL. THIS DIMENSION CAN BE REDUCED TO 4'0" (1219) IF CONDITIONS PERMIT COIL REMOVAL FROM THE TOP.
   - 4'0" (1219) TO COMBUSTIBLE SURFACES, ALL FOUR SIDES (INCLUDES BETWEEN UNITS).
   - LEFT SIDE: 4'0" (1219) FOR PROPER CONDENSER COIL AIR FLOW.
   - FRONT: 4'0" (1219) FOR CONTROL BOX ACCESS.
   - RIGHT SIDE: 4'0" (1219) FOR PROPER OPERATION OF DAMPER AND POWER EXHAUST IF SO EQUIPPED.
   - TOP: 6'0" (1829) TO ASSURE PROPER CONDENSER FAN OPERATION.
   - BOTTOM: 14" (356) TO COMBUSTIBLE SURFACES (WHEN NOT USING CURB).
   - CONTROL BOX SIDE: 3'0" (914) TO UNGROUNDED SURFACES, NON-COMBUSTIBLE.
   - CONTROL BOX SIDE: 3'6" (1067) TO BLOCK OR CONCRETE WALLS, OR OTHER GROUNDED SURFACES.
   - LOCAL CODES OR JURISDICTION MAY PREVAIL.
7. WITH THE EXCEPTION OF CLEARANCE FOR THE CONDENSER COIL AND THE DAMPER/POWER EXHAUST AS STATED IN NOTE #6, A REMOVABLE FENCE OR BARRICADE REQUIRES NO CLEARANCE.
8. DIMENSIONS ARE FROM OUTSIDE OF CORNER POST. ALLOW 0'-5/16" (8) ON EACH SIDE FOR TOP COVER DRIP EDGE.
9. SEE DRAWING 50TJ500352 FOR SERVICE OPTION DETAILS.

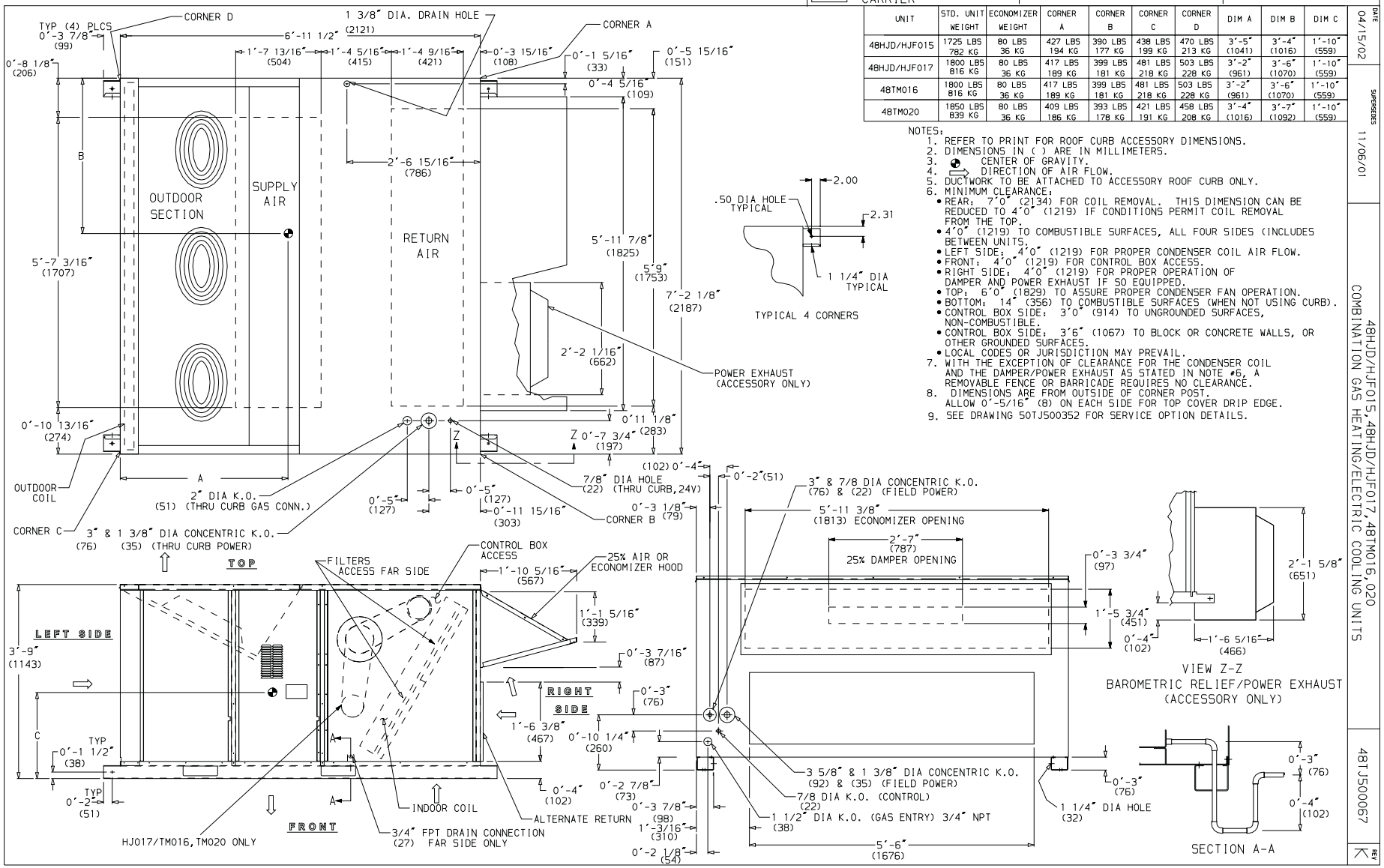

DATE 04/15/02
SUPERSEDES 11/06/01
48HJD/HJF015,48HJD/HJF017,48TM016,020
COMBINATION GAS HEATING/ELECTRIC COOLING UNITS
48TJ500067
REV K

CUT ALONG DOTTED LINE

CUT ALONG DOTTED LINE

CERTIFIED DIMENSION PRINT

48TM025

UNITED TECHNOLOGIES CARRIER
P O BOX 4808
SYRACUSE N. Y. 13221

THIS DOCUMENT IS THE PROPERTY OF CARRIER CORPORATION AND IS DELIVERED UPON THE EXPRESS CONDITION THAT THE CONTENTS WILL NOT BE DISCLOSED OR USED WITHOUT CARRIER CORPORATION'S WRITTEN CONSENT.

SUBMISSION OF THESE DRAWINGS OR DOCUMENTS DOES NOT CONSTITUTE PART PERFORMANCE OR ACCEPTANCE OF CONTRACT

UNIT	STD. UNIT WEIGHT	ECONOMIZER WEIGHT	CORNER A	CORNER B	CORNER C	CORNER D	DIM A	DIM B	DIM C
48HJD/HJF 025	1900 LBS 862 KG	80 LBS 36 KG	443 LBS 201 KG	408 LBS 185 KG	498 LBS 226 KG	550 LBS 250 KG	3'-1" (951)	3'-5" (1044)	1'-8" (508)
48TMD/TMF 025	1900 LBS 862 KG	80 LBS 36 KG	454 LBS 206 KG	418 LBS 190 KG	488 LBS 222 KG	540 LBS 245 KG	3'-3" (991)	3'-7" (1092)	1'-8" (508)

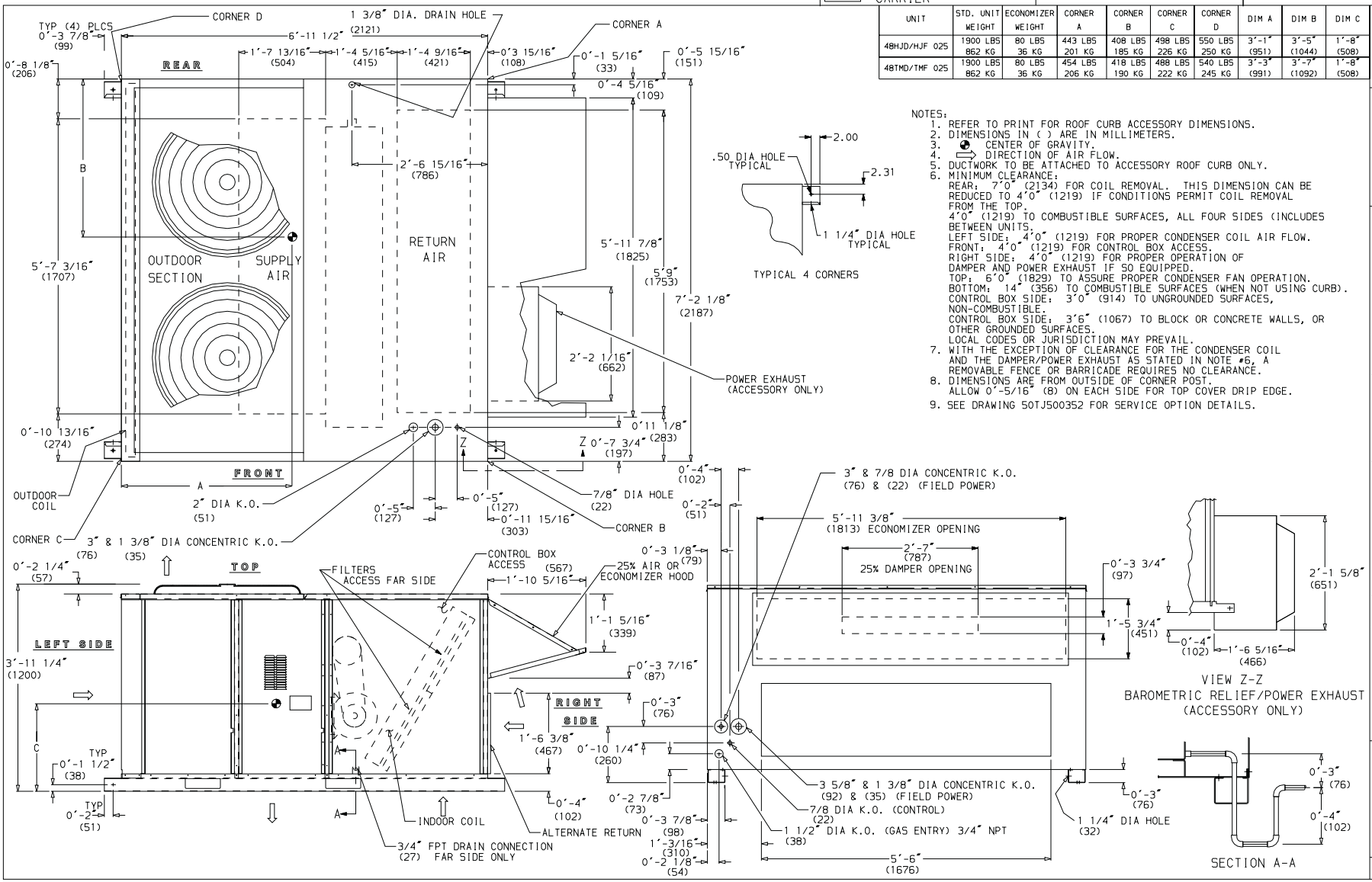

NOTES:
1. REFER TO PRINT FOR ROOF CURB ACCESSORY DIMENSIONS.
2. DIMENSIONS IN ( ) ARE IN MILLIMETERS.
3. ◕ CENTER OF GRAVITY.
4. ⇨ DIRECTION OF AIR FLOW.
5. DUCTWORK TO BE ATTACHED TO ACCESSORY ROOF CURB ONLY.
6. MINIMUM CLEARANCE:
   REAR: 7'0" (2134) FOR COIL REMOVAL. THIS DIMENSION CAN BE REDUCED TO 4'0" (1219) IF CONDITIONS PERMIT COIL REMOVAL FROM THE TOP.
   4'0" (1219) TO COMBUSTIBLE SURFACES, ALL FOUR SIDES (INCLUDES BETWEEN UNITS.
   LEFT SIDE: 4'0" (1219) FOR PROPER CONDENSER COIL AIR FLOW.
   FRONT: 4'0" (1219) FOR CONTROL BOX ACCESS.
   RIGHT SIDE: 4'0" (1219) FOR PROPER OPERATION OF DAMPER AND POWER EXHAUST IF SO EQUIPPED.
   TOP: 6'0" (1829) TO ASSURE PROPER CONDENSER FAN OPERATION.
   BOTTOM: 14" (356) TO COMBUSTIBLE SURFACES (WHEN NOT USING CURB).
   CONTROL BOX SIDE: 3'0" (914) TO UNGROUNDED SURFACES, NON-COMBUSTIBLE.
   CONTROL BOX SIDE: 3'6" (1067) TO BLOCK OR CONCRETE WALLS, OR OTHER GROUNDED SURFACES.
   LOCAL CODES OR JURISDICTION MAY PREVAIL.
7. WITH THE EXCEPTION OF CLEARANCE FOR THE CONDENSER COIL AND THE DAMPER/POWER EXHAUST AS STATED IN NOTE #6, A REMOVABLE FENCE OR BARRICADE REQUIRES NO CLEARANCE.
8. DIMENSIONS ARE FROM OUTSIDE OF CORNER POST. ALLOW 0'-5/16" (8) ON EACH SIDE FOR TOP COVER DRIP EDGE.
9. SEE DRAWING 50TJ500352 FOR SERVICE OPTION DETAILS.

DATE 04/15/02
SUPERSEDES 11/07/01
48HJD/HJF025, 48TMD025/TMF025
COMBINATION GAS HEATING/ELECTRIC COOLING UNITS
48TJ500470
REV

CERTIFIED DIMENSION PRINT

48TM028

UNITED TECHNOLOGIES CARRIER
P O BOX 4808
SYRACUSE N. Y.
13221

THIS DOCUMENT IS THE PROPERTY OF CARRIER CORPORATION AND IS DELIVERED UPON THE EXPRESS CONDITION THAT THE CONTENTS WILL NOT BE DISCLOSED OR USED WITHOUT CARRIER CORPORATION'S WRITTEN CONSENT.

SUBMISSION OF THESE DRAWINGS OR DOCUMENTS DOES NOT CONSTITUTE PART PERFORMANCE OR ACCEPTANCE OF CONTRACT

UNIT	STD. UNIT WEIGHT	ECONOMIZER WEIGHT	CORNER A	CORNER B	CORNER C	CORNER D	DIM A	DIM B	DIM C
48TM028	2270 LBS 1030 KG	80 LBS 36 KG	532 LBS 242 KG	526 LBS 239 KG	569 LBS 259 KG	593 LBS 270 KG	4'-6" (1372)	3'-7 1/4" (1099)	2'-1 1/4" (641)

48TM028

NOTES:
1. REFER TO PRINT FOR ROOF CURB ACCESSORY DIMENSIONS.
2. DIMENSIONS IN ( ) ARE IN MILLIMETERS.
3. ⊕ CENTER OF GRAVITY.
4. ⇨ DIRECTION OF AIR FLOW.
5. DUCTWORK TO BE ATTACHED TO ACCESSORY ROOF CURB ONLY.
6. MINIMUM CLEARANCE:
   REAR: 7'0" (2134) FOR COIL REMOVAL. THIS DIMENSION CAN BE REDUCED TO 4'0" (1219) IF CONDITIONS PERMIT COIL REMOVAL FROM THE TOP.
   4'0" (1219) TO COMBUSTIBLE SURFACES, ALL FOUR SIDES (INCLUDES BETWEEN UNITS.
   LEFT SIDE: 4'0" (1219) FOR PROPER CONDENSER COIL AIR FLOW.
   FRONT: 4'0" (1219) FOR CONTROL BOX ACCESS.
   RIGHT SIDE: 4'0" (1219) FOR PROPER OPERATION OF DAMPER AND POWER EXHAUST IF SO EQUIPPED.
   TOP: 6'0" (1829) TO ASSURE PROPER CONDENSER FAN OPERATION.
   BOTTOM: 14" (356) TO COMBUSTIBLE SURFACES (WHEN NOT USING CURB).
   CONTROL BOX SIDE: 3'0" (914) TO UNGROUNDED SURFACES, NON-COMBUSTIBLE.
   CONTROL BOX SIDE: 3'6" (1067) TO BLOCK OR CONCRETE WALLS, OR OTHER GROUNDED SURFACES.
   LOCAL CODES OR JURISDICTION MAY PREVAIL.
7. WITH THE EXCEPTION OF CLEARANCE FOR THE CONDENSER COIL AND THE DAMPER/POWER EXHAUST AS STATED IN NOTE #6, A REMOVABLE FENCE OR BARRICADE REQUIRES NO CLEARANCE.
8. DIMENSIONS ARE FROM OUTSIDE OF CORNER POST. ALLOW 0'-5/16" (8) ON EACH SIDE FOR TOP COVER DRIP EDGE.
9. SEE DRAWING 50TJ500995 FOR SERVICE OPTION DETAILS.

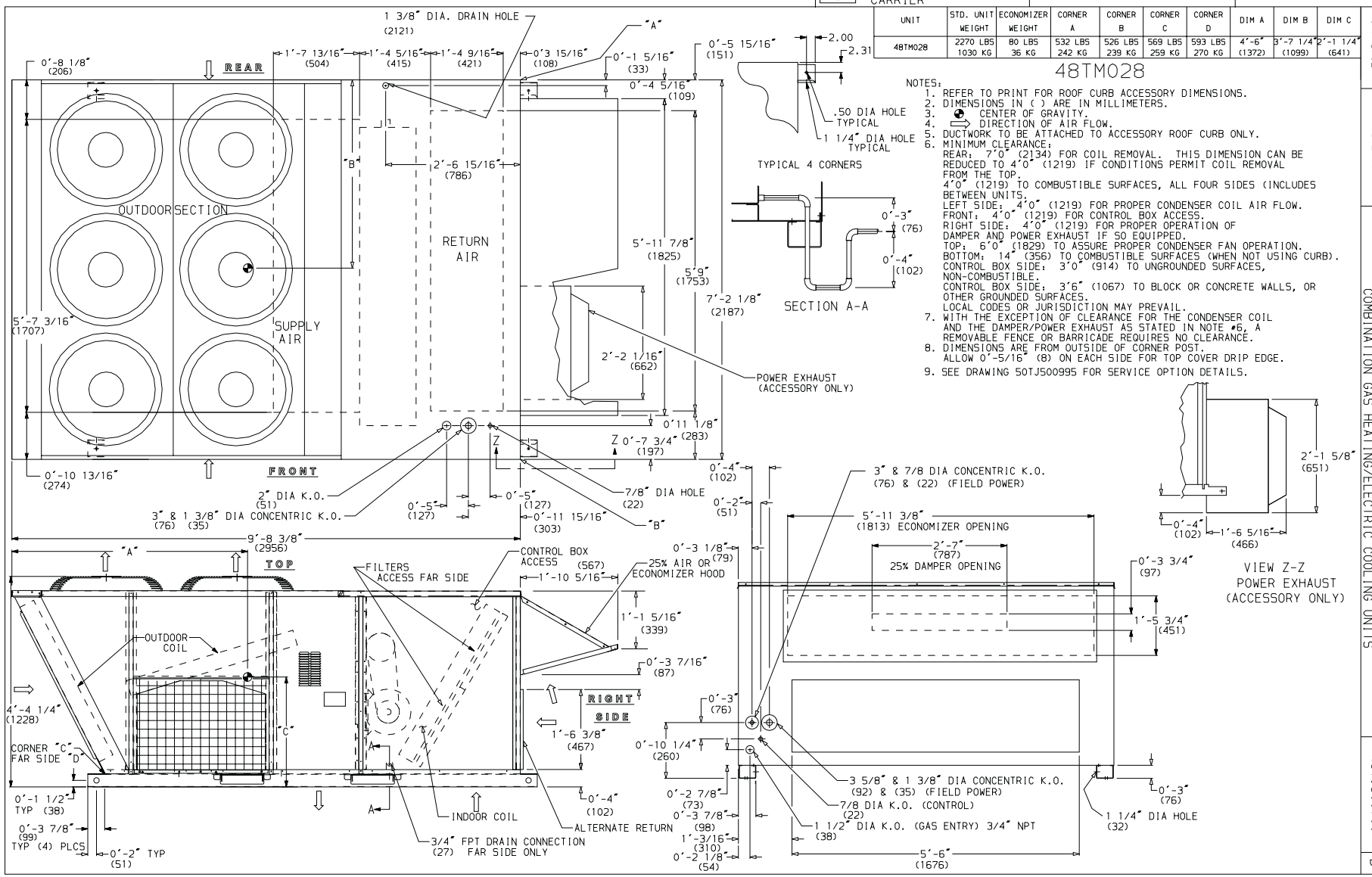

DATE 04/15/02
SUPERSEDES 09/27/01
48TM028 COMBINATION GAS HEATING/ELECTRIC COOLING UNITS
48TJ500700
REV B

CUT ALONG DOTTED LINE CUT ALONG DOTTED LINE

CERTIFIED ROOF CURB DIMENSION PRINT

48TM016-025

UNITED TECHNOLOGIES CARRIER — P O BOX 4808 SYRACUSE N. Y. 13221

THIS DOCUMENT IS THE PROPERTY OF CARRIER CORPORATION AND IS DELIVERED UPON THE EXPRESS CONDITION THAT THE CONTENTS WILL NOT BE DISCLOSED OR USED WITHOUT CARRIER CORPORATION'S WRITTEN CONSENT.

SUBMISSION OF THESE DRAWINGS OR DOCUMENTS DOES NOT CONSTITUTE PART PERFORMANCE OR ACCEPTANCE OF CONTRACT

PKG. NO. REF.	CURB HEIGHT	DESCRIPTION
CRRFCURB010A00	1'-2" (305)	STANDARD CURB 14" HIGH
CRRFCURB011A00	2'-0" (610)	STANDARD CURB FOR UNITS REQUIRING HIGH INSTALLATION
CRRFCURB012A00	2'-0" (610)	SIDE SUPPLY AND RETURN CURB FOR HIGH INSTALLATION

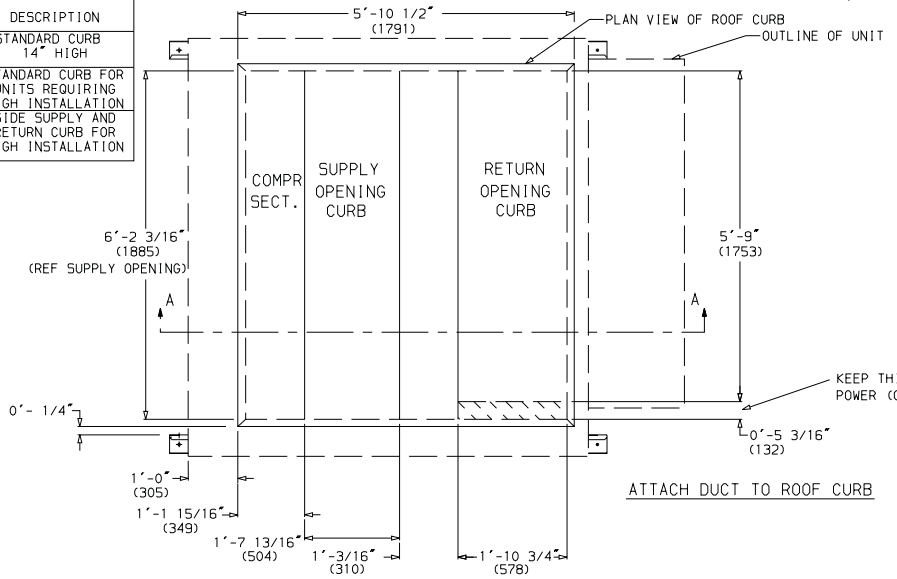

ATTACH DUCT TO ROOF CURB

NOTES:
1. ROOF CURB ACCESSORY IS SHIPPED DISASSEMBLED.
2. INSULATED PANELS: 1" THICK NEOPRENE COATED 1-1/2 LB DENSITY.
3. DIMENSIONS IN ( ) ARE IN MILLIMETERS.
4. ⇨ DIRECTION OF AIR FLOW
5. ROOFCURB: 16 GA. (VA03-56) STL.
6. A 90 DEGREE ELBOW MUST BE INSTALLED ON THE SUPPLY DUCT WORK BELOW THE UNIT DISCHARGE FOR UNITS EQUIPPED WITH . ELECTRIC HEATERS.

NOTE:
TO PREVENT THE HAZARD OF STAGNANT WATER BUILD-UP IN THE DRAIN PAN OF THE INDOOR SECTION, UNIT CAN ONLY BE PITCHED AS SHOWN.

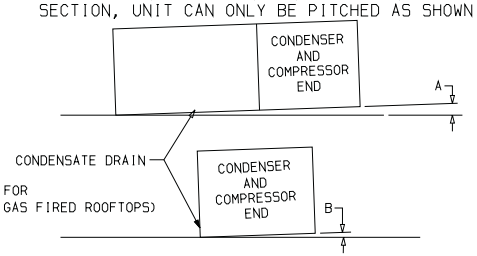

DIMENSIONS (degrees and inches)

UNIT	A		B	
	DEG.	IN.	DEG.	IN.
ALL	.28	.45	.28	.43

UNIT LEVELING TOLERANCES
*From edge of unit to horizontal.

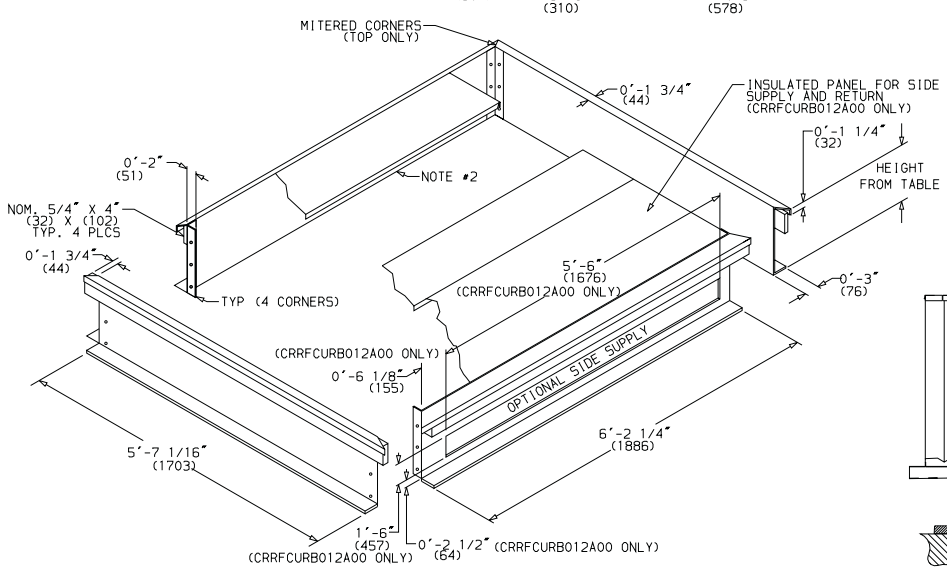

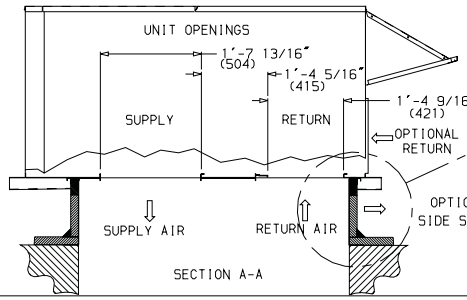

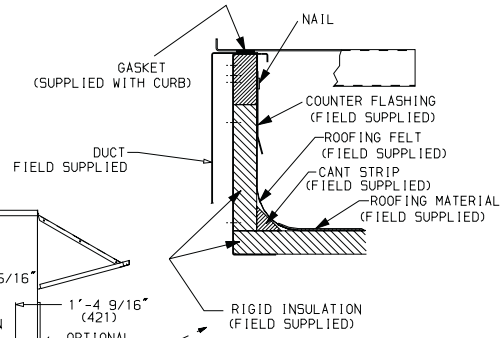

DATE 04/15/02

SUPERSEDES 04/14/99

50HJ0014,016;50/48HJD/HJF015,017,025;50/48TJD/TJF016,020,024,028
542J150,180;551A/581A155,180,240;559F/579F180,216,240,300
48/50TM016,020,025;580F/558F180,210,240

ROOF CURB (BOTTOM SUPPLY/RETURN UNITS AND OPTIONAL SIDE SUPPLY)

50PG500834

REV. J

CERTIFIED ROOF CURB DIMENSION PRINT

48TM028

UNITED TECHNOLOGIES CARRIER
P O BOX 4808 SYRACUSE N. Y. 13221

THIS DOCUMENT IS THE PROPERTY OF CARRIER CORPORATION AND IS DELIVERED UPON THE EXPRESS CONDITION THAT THE CONTENTS WILL NOT BE DISCLOSED OR USED WITHOUT CARRIER CORPORATION'S WRITTEN CONSENT.

SUBMISSION OF THESE DRAWINGS OR DOCUMENTS DOES NOT CONSTITUTE PART PERFORMANCE OR ACCEPTANCE OF CONTRACT

PKG. NO. REF.	CURB HEIGHT	DESCRIPTION
CRRFCURB010A00	1'-2" (305)	STANDARD CURB 14" HIGH
CRRFCURB011A00	2'-0" (610)	STANDARD CURB FOR UNITS REQUIRING HIGH INSTALLATION
CRRFCURB012A00	2'-0" (610)	SIDE SUPPLY AND RETURN CURB FOR HIGH INSTALLATION

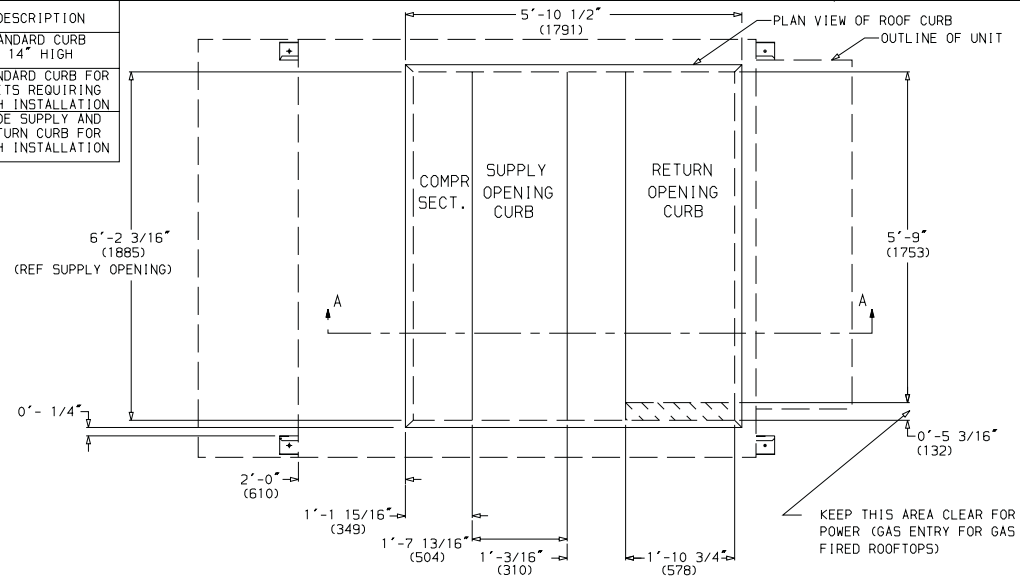

ATTACH DUCT TO ROOF CURB

NOTES:
1. ROOF CURB ACCESSORY IS SHIPPED DISASSEMBLED.
2. INSULATED PANELS; 1" THICK NEOPRENE COATED 1-1/2 LB DENSITY.
3. DIMENSIONS IN ( ) ARE IN MILLIMETERS.
4. ⟹ DIRECTION OF AIR FLOW
5. ROOFCURB; 16 GA. (VA03-56) STL.
6. **A 90 DEGREE ELBOW MUST BE INSTALLED ON THE SUPPLY DUCT WORK BELOW THE UNIT DISCHARGE FOR UNITS EQUIPPED WITH . ELECTRIC HEATERS.**

NOTE:
TO PREVENT THE HAZARD OF STAGNANT WATER BUILD-UP IN THE DRAIN PAN OF THE INDOOR SECTION, UNIT CAN ONLY BE PITCHED AS SHOWN.

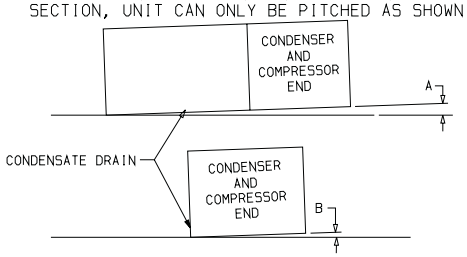

DIMENSIONS (degrees and inches)

UNIT	A		B	
	DEG.	IN.	DEG.	IN.
ALL	.28	.45	.28	.43

UNIT LEVELING TOLERANCES
*From edge of unit to horizontal.

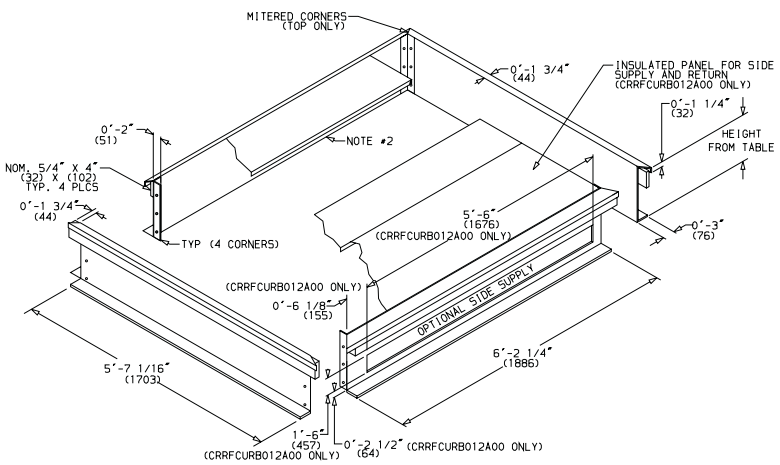

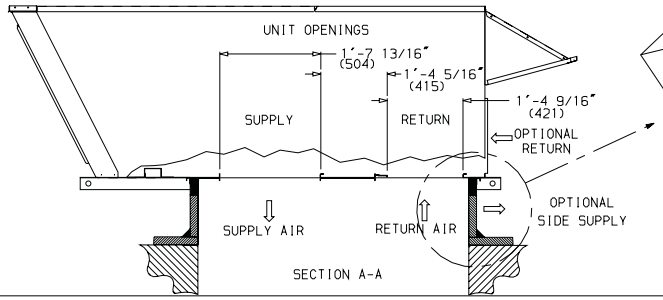

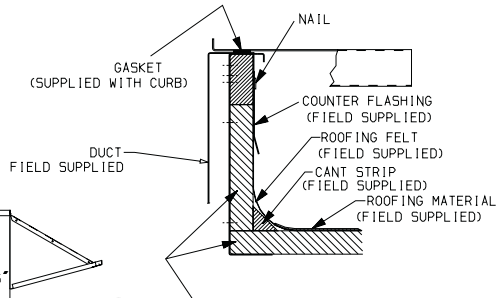

DATE 04/11/02
SUPERSEDES 08/20/01
ROOF CURB (BOTTOM SUPPLY/RETURN UNITS AND OPTIONAL SIDE SUPPLY)
48/50TM028,50TJ030,580F/558F300
50TJ500998
REV A

CUT ALONG DOTTED LINE CUT ALONG DOTTED LINE

HORIZONTAL SUPPPLY/RETURN ADAPTER DIMENSION DRAWING

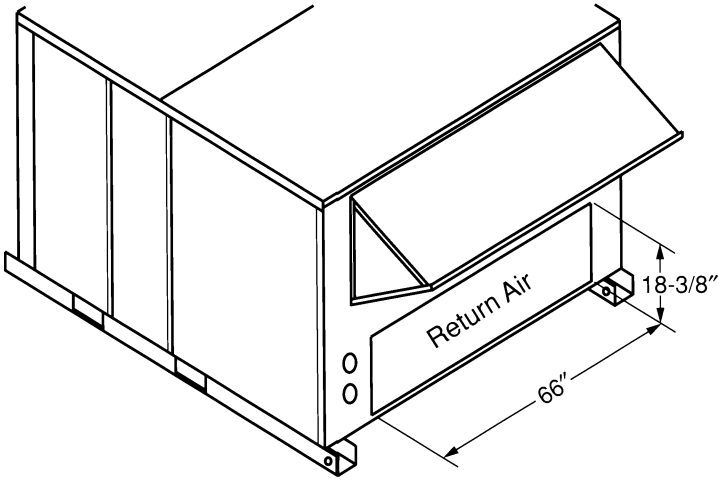

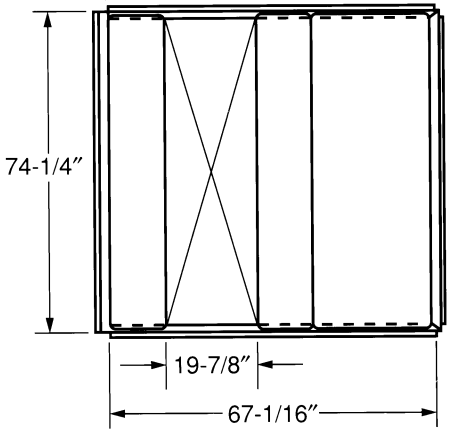

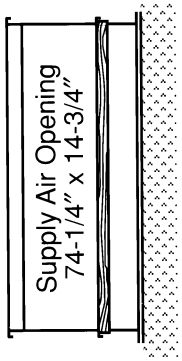

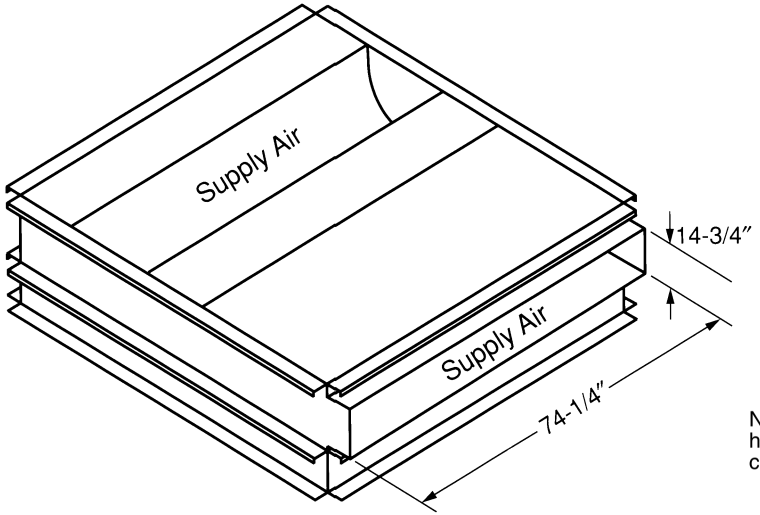

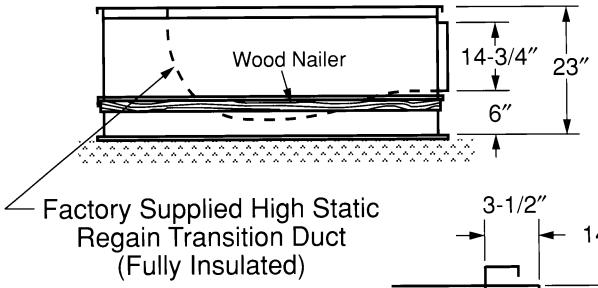

NOTE: The horizontal supply/return adapter roof curb has the same length and width as the standard roof curb.

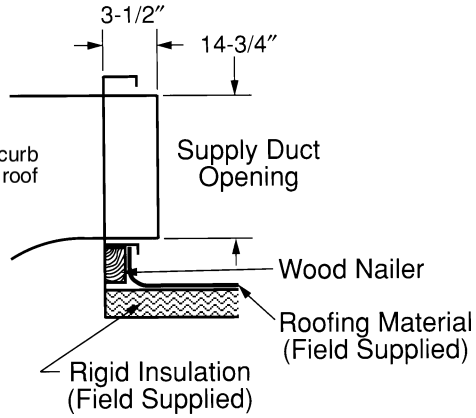

FACTORY PRE-ASSEMBLED HORIZONTAL SUPPLY/RETURN ADAPTER ACCESSORY CRRFCURB013A00

SERVICE OPTION DIMENSION PRINT

48TM016-025

UNITED TECHNOLOGIES CARRIER
P O BOX 4808
SYRACUSE N. Y.
13221

THIS DOCUMENT IS THE PROPERTY OF CARRIER CORPORATION AND IS DELIVERED UPON THE EXPRESS CONDITION THAT THE CONTENTS WILL NOT BE DISCLOSED OR USED WITHOUT CARRIER CORPORATION'S WRITTEN CONSENT.

SUBMISSION OF THESE DRAWINGS OR DOCUMENTS DOES NOT CONSTITUTE PART PERFORMANCE OR ACCEPTANCE OF CONTRACT

NOTES:

1. CONVENIENCE OUTLET WIRING IS FIELD SUPPLIED.
2. ALL ACCESS DOORS ARE HINGED AND SECURED WITH 1/4 TURN LATCHES.
3. ALL FILTER ELEMENTS CAN BE REMOVED BY GRASPING FILTER SUPPORT TAB AND SLIDING OUTWARD.

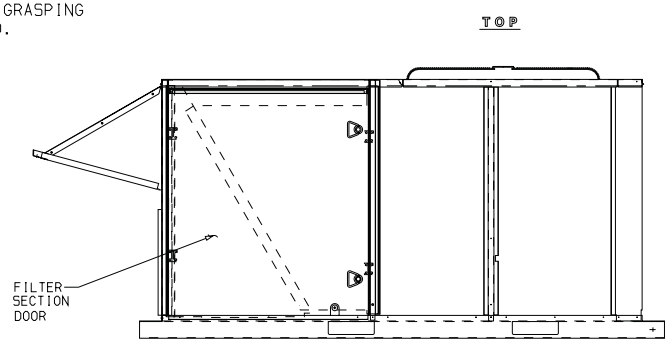

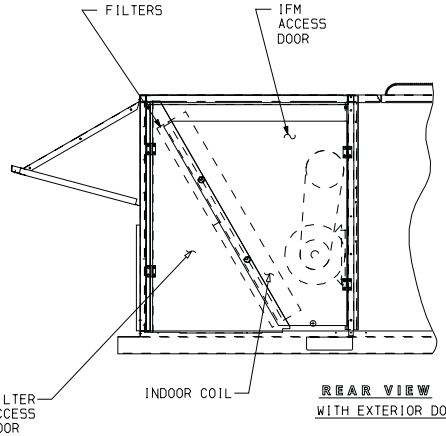

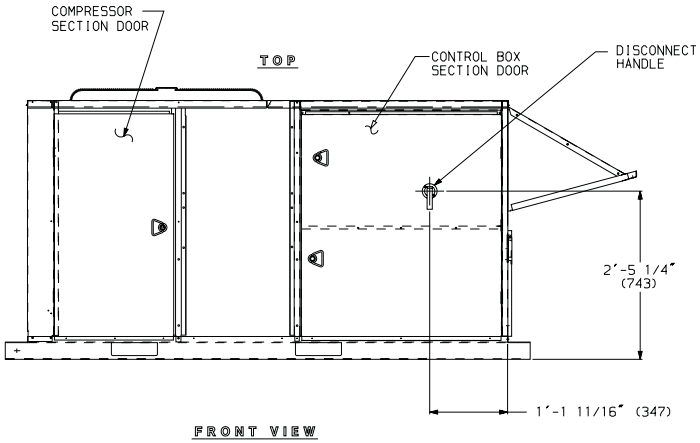

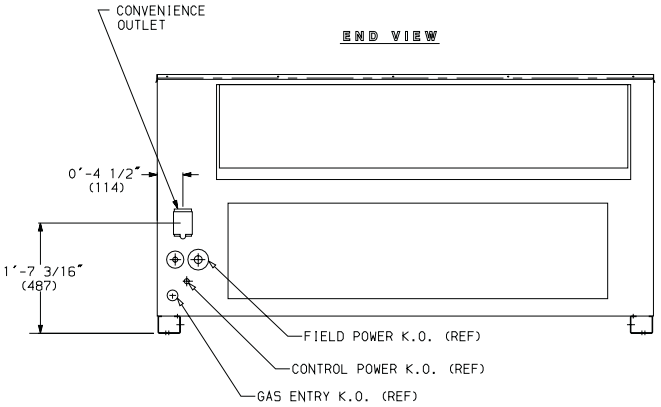

DATE	SUPERSEDES			REV.
11/05/01	10/14/97	48 & 50 SERIES HJ/TJ 015-028, TM016,020,025 SERVICE OPTION DETAILS	50TJ500352	B

CUT ALONG DOTTED LINE

CUT ALONG DOTTED LINE

SERVICE OPTION DIMENSION PRINT

48TM028

UNITED TECHNOLOGIES CARRIER
P O BOX 4808
SYRACUSE N. Y.
13221

THIS DOCUMENT IS THE PROPERTY OF CARRIER CORPORATION AND IS DELIVERED UPON THE EXPRESS CONDITION THAT THE CONTENTS WILL NOT BE DISCLOSED OR USED WITHOUT CARRIER CORPORATION'S WRITTEN CONSENT.

SUBMISSION OF THESE DRAWINGS OR DOCUMENTS DOES NOT CONSTITUTE PART PERFORMANCE OR ACCEPTANCE OF CONTRACT

NOTES:

1. CONVENIENCE OUTLET WIRING IS FIELD SUPPLIED.
2. ALL ACCESS DOORS ARE HINGED AND SECURED WITH 1/4 TURN LATCHES.
3. ALL FILTER ELEMENTS CAN BE REMOVED BY GRASPING FILTER SUPPORT TAB AND SLIDING OUTWARD.

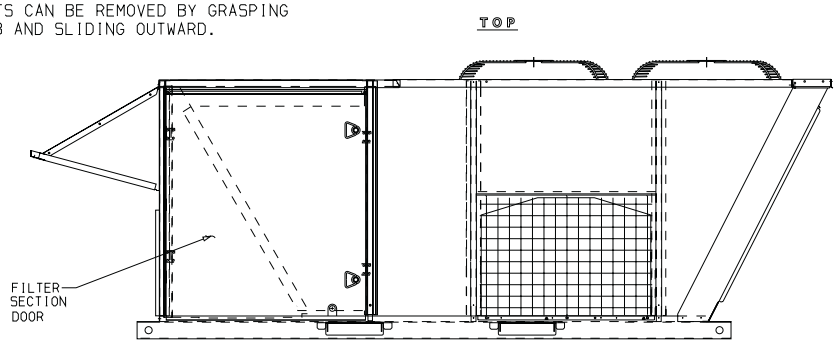

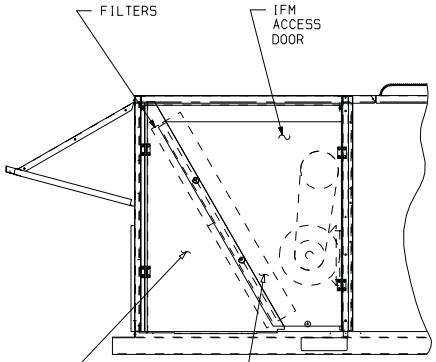

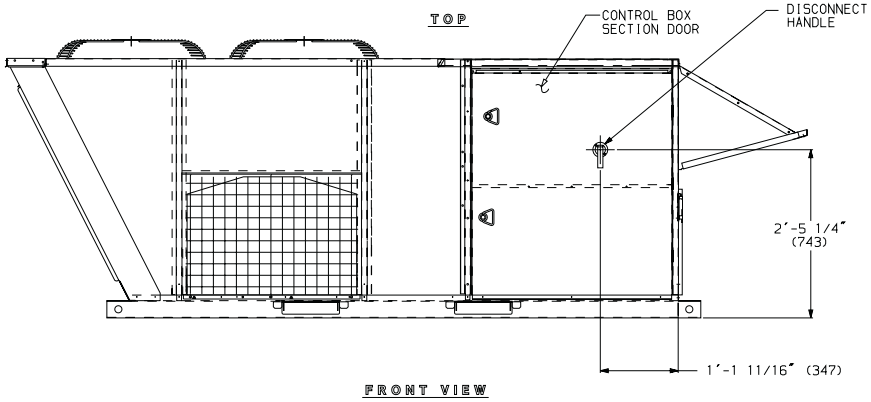

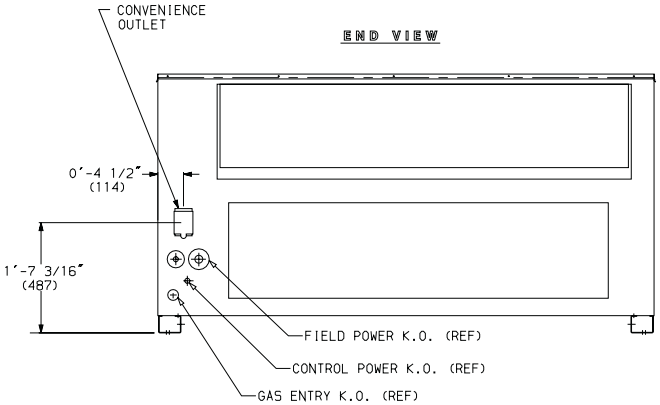

DATE	SUPERSEDES			REV
09/27/01		48 & 50TM028 SERVICE OPTION DETAILS	50TJ500995	A